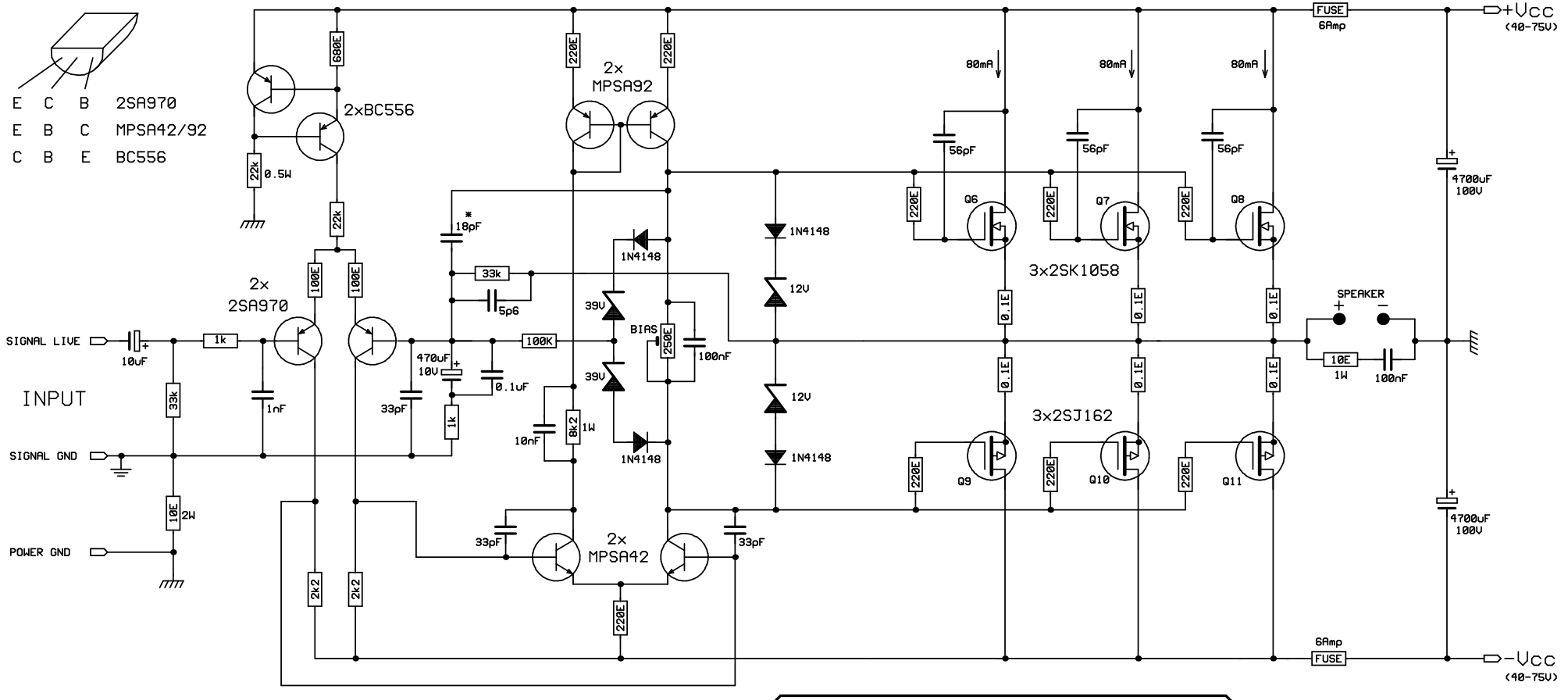

UNIVERSAL-300

Designed by: Dr. Borivoje Jagodic

www.bas.abshost.net