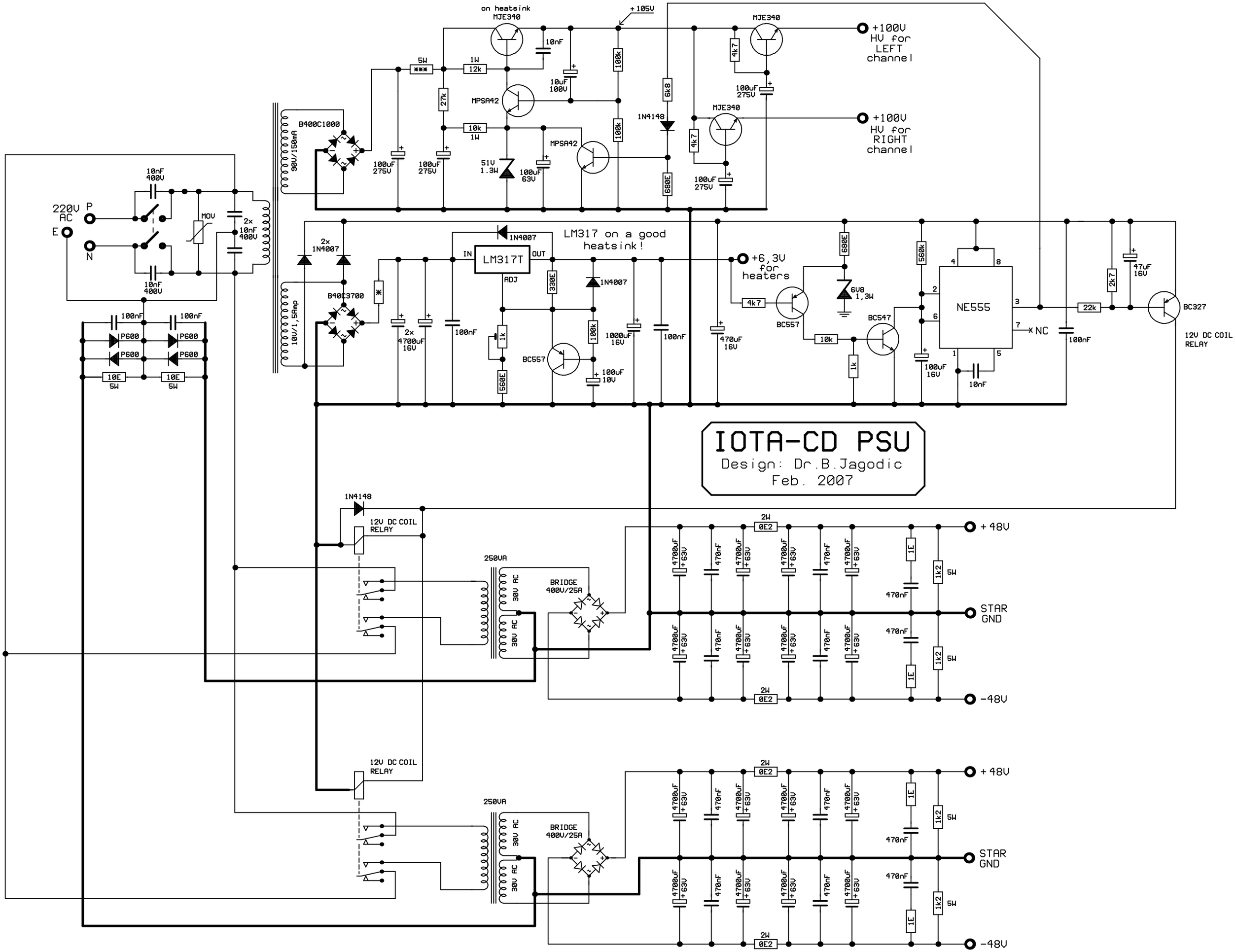
IOTA-CD PSU
Design: Dr.B.Jagodic
Feb. 2007
220V AC
P
E
N
10nF 400V
MOV
2x 10nF 400V
B400C1000
90V/150mA
on heatsink MJE340
+105V
5W
1W 12k
10nF
10uF 100V
100k
27k
MPSA42
10k 1W
51V 1.3W
100uF 63V
100uF 275V
6k8
1N4148
680E
4k7
MJE340
+100V HV for LEFT channel
+100V HV for RIGHT channel
2x 1N4007
B40C3700
10V/1,5Amp
LM317 on a good heatsink!
LM317T
IN
OUT
ADJ
330E
1k
560E
BC557
1000uF 16V
100uF 10V
2x 4700uF 16V
470uF 16V
+6,3V for heaters
6V8 1,3W
10k
BC547
560k
NE555
NC
22k
2k7
47uF 16V
BC327
12V DC COIL RELAY
100nF
P600
10E 5W
250VA
30V AC
BRIDGE 400V/25A
4700uF 63V
470nF
2W 0E2
1E
1k2 5W
+ 48V
STAR GND
-48V