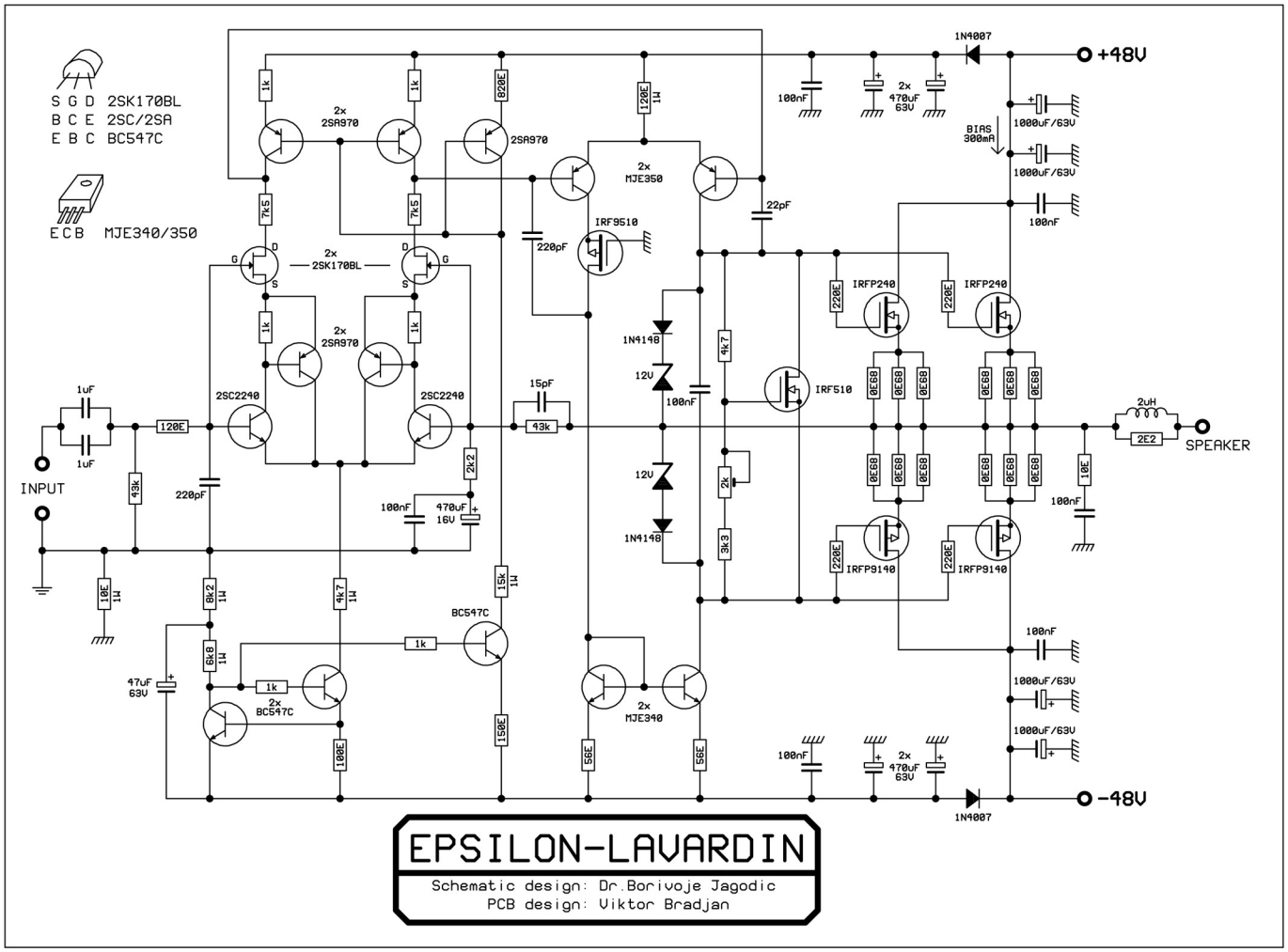
S G D 2SK170BL
B C E 2SC/2SA
E B C BC547C
E C B MJE340/350
+48V
-48V
INPUT
SPEAKER
BIAS 300mA
EPSILON-LAVARDIN
Schematic design: Dr.Borivoje Jagodic
PCB design: Viktor Bradjan

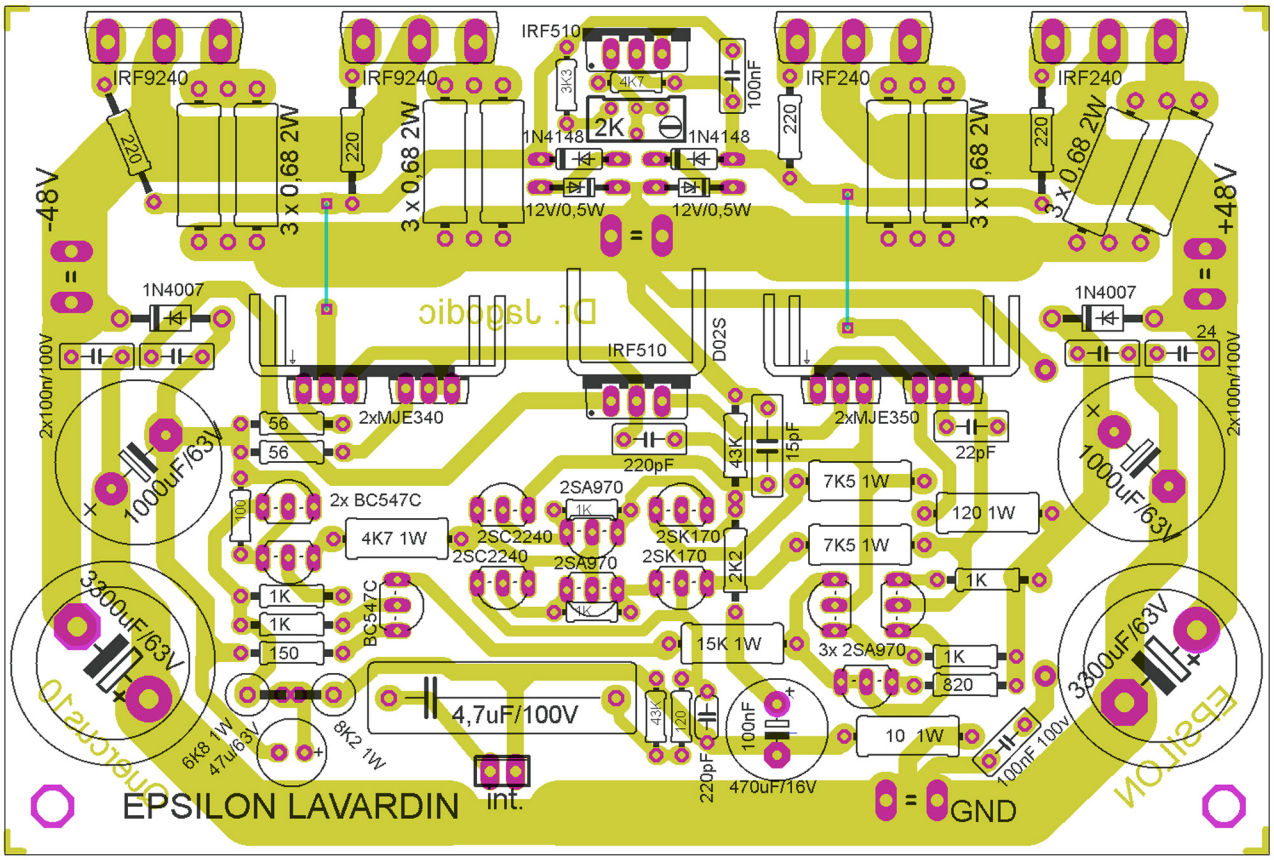
IRF9240
IRF510
IRF240
3 x 0,68 2W
1N4148
12V/0,5W
-48V
+48V
1N4007
2xMJE340
2xMJE350
2x BC547C
4K7 1W
2SA970
2SC2240
2SK170
7K5 1W
120 1W
15K 1W
3x 2SA970
10 1W
4,7uF/100V
470uF/16V
1000uF/63V
3300uF/63V
EPSILON LAVARDIN
int.
GND

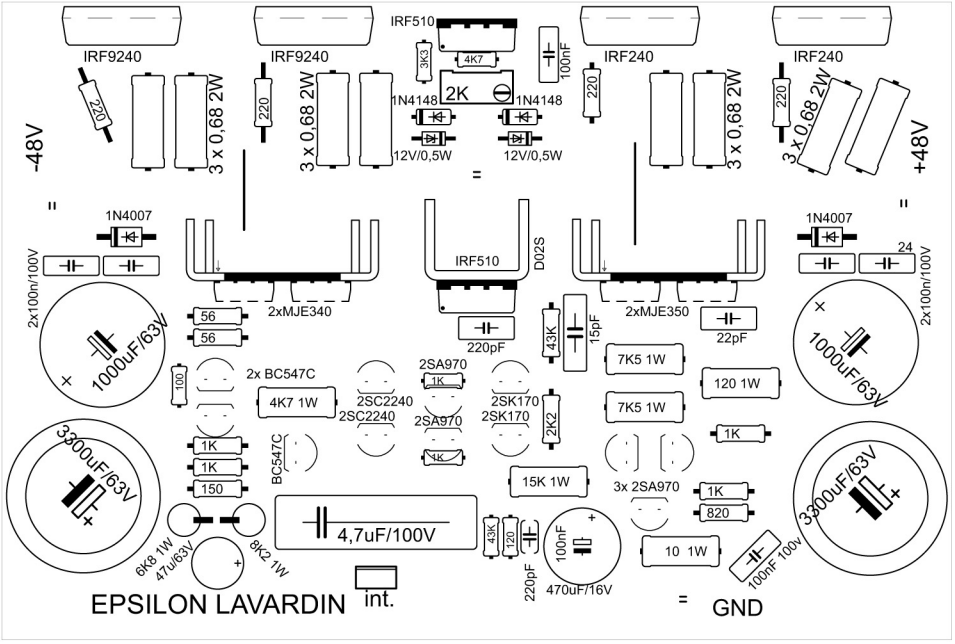
IRF9240
IRF9240
IRF510
IRF240
IRF240
-48V
+48V
220
3 x 0,68 2W
3K3
4K7
2K
100nF
1N4148
12V/0,5W
1N4007
2x100n/100V
1000uF/63V
3300uF/63V
2xMJE340
2xMJE350
D02S
56
220pF
22pF
43K
15pF
7K5 1W
120 1W
2x BC547C
4K7 1W
2SC2240
2SA970
2SK170
2K2
1K
BC547C
150
15K 1W
3x 2SA970
820
4,7uF/100V
6K8 1W
47u/63V
8K2 1W
120
100nF
470uF/16V
10 1W
100nF 100v
EPSILON LAVARDIN
int.
GND

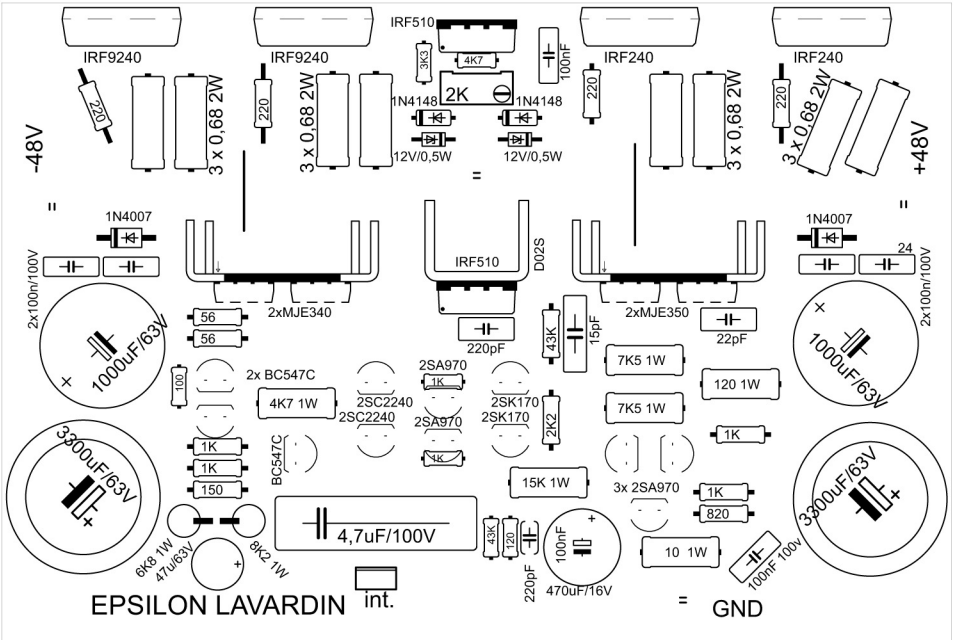
IRF9240
IRF9240
IRF510
IRF240
IRF240
-48V
+48V
220
3 x 0,68 2W
3K3
4K7
2K
100nF
1N4148
12V/0,5W
1N4007
2x100n/100V
1000uF/63V
3300uF/63V
2xMJE340
2xMJE350
D02S
56
220pF
22pF
43K
15pF
7K5 1W
120 1W
2x BC547C
4K7 1W
2SC2240
2SA970
2SK170
2K2
1K
BC547C
150
15K 1W
3x 2SA970
820
4,7uF/100V
6K8 1W
47u/63V
8K2 1W
120
100nF
470uF/16V
10 1W
100nF 100v
EPSILON LAVARDIN
int.
GND

Dr. Jagodic
EPSILON
Quercus10

Dr. Jagodic
EPSILON
Quercus10